Available from: **MARYLAND METRICS**
Phones: (410)358-3130 (800)638-1830 Faxes: (410)358-3142 (800)872-9329
P.O.Box 261 Owings Mills, MD 21117 USA URL: http://mdmetric.com E-mail: sales@mdmetric.com

HRC COUPLINGS

HRC Couplings offer a range of hub and element selection to meet the demand for a low cost, general purpose spacer type flexible coupling. They allow for incidental misalignment, absorb shock loads and dampen out small amplitude vibrations. They are offered in both Pilot bore, Finished bore, and Taper bushed with both face and hub mount.

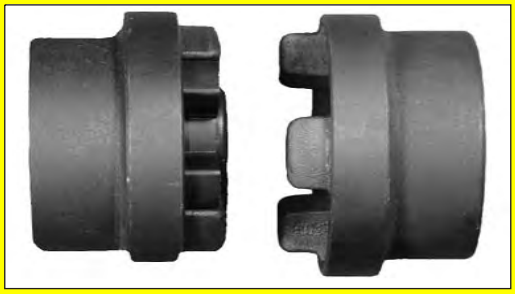

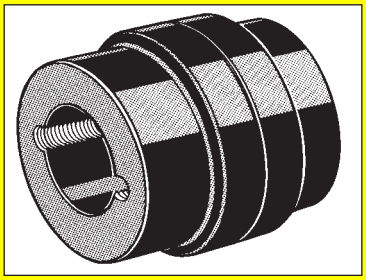

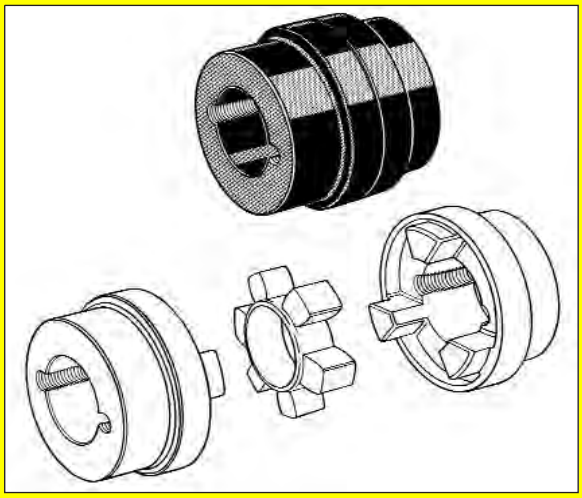

copyright 2002, 2005, 2008, 2010 maryland metrics

Available from: **MARYLAND METRICS**
Phones: (410)358-3130 (800)638-1830 Faxes: (410)358-3142 (800)872-9329
P.O.Box 261 Owings Mills, MD 21117 USA URL: http://mdmetric.com E-mail: sales@mdmetric.com

These semi-elastomeric couplings are designed for general purpose applications and permit quick and easy assembly by means of Taper bush. Outside diameters are fully machined to allow alignment by simple straight edge methods. Shaft connection is "fail safe" due to interacting jaw design.

SELECTION

(a) Service Factor
Determine appropriate Service Factor from table below.

(b) Design Power
Multiply running power of driven machinery by the service factor. This gives the design power which is used as a basis for coupling selection.

(c) Coupling Size
Refer to Power Ratings table below and read across from the appropriate speed until a power greater than the design power is found. The size of coupling is given at the head of that column.

(d) Bore Size
From Dimensions table (page C-16) check that the required bores can be accommodated. EXAMPLE

A shaft coupling is required to transmit 70kW between a 1200 rev/min diesel engine and a hoist running over 16 hrs/day. Engine shaft is 70 mm and the hoist shaft is 75 mm.

(a) Service Factor
The appropriate Service Factor is 2,5.

(b) Design Power
Design power 70 x 2,5=175kW.

(c) Coupling Size
Reading across from 1200 rev/min in the speed column of Power Ratings table below, 251kW is the first power to exceed the required 175kW (design power). The size of the coupling at the head of this column is 230.

(d) Bore Size
The Dimensions table (page C-16) shows that both shaft diameters are within the bore range available.

SERVICE FACTORS

SPECIAL CASES For application where substantial shock, vibration and torque fluctuation occur, and for reciprocating machines e.g. internal combustion engines, piston type pumps and compressors, refer to Martin with full machine details for torsional analysis.	Type of Driving Unit					
	Electric Motors Steam Turbines			Internal Combustion Engines Steam Engines Water Turbines		
	Hours per day duty			Hours per day duty		
Driven Machine Class	8 and under	over 8 to 16 inclusive	over 16	8 and under	over 8 to 16 inclusive	over 16
UNIFORM Agitators, Brewing machinery, Centrifugal blowers, Centrifugal compressors+, Conveyors, Centrifugal fans and pumps, Generators, Sewage disposal equipment.	1,00	1,12	1,25	1,25	1,40	1,60
MODERATE SHOCK* Clay working machinery, crane hoists, Laundry machinery, Wood working machinery, Machine tools, Rotary mills, Paper mill machinery, Textile machinery, Non-uniformly loaded centrifugal pumps.	1,60	1,80	2,00	2,00	2,24	2,50
HEAVY SHOCK* Reciprocating conveyors, Crushers, Shakers, Metal mills, Rubber machinery (Banbury mixers and mills), Reciprocating compressors, Welding sets.	2,50	2,80	3,12	3,12	3,55	4,00

*It is recommended that keys (with top clearance if in Taper bushes) are fitted for applications where load fluctuation is expected.
+ For Centrifugal Compressors multiply Service Factor by an additional 1,15.

POWER RATINGS (Kw)

Speed rev/min	Coupling Size							
	70	**90**	**110**	**130**	**150**	**180**	**230**	**280**
100	0,33	0,84	1,68	3,30	6,28	9,95	20,90	33,00
200	0,66	1,68	3,35	6,60	12,60	19,90	41,90	65,00
400	1,32	3,35	6,70	13,20	25,10	39,80	83,80	132,00
600	1,98	5,03	10,10	19,80	37,70	59,70	126,00	198,00
720	2,37	6,03	12,10	23,80	45,20	71,60	151,00	238,00
800	2,65	6,70	13,40	26,40	50,30	79,60	168,00	264,00
960	3,17	8,04	16,10	31,70	60,30	95,50	201,00	317,00
1200	3,96	10,10	20,10	39,60	75,40	119,00	251,00	396,00
1440	4,75	12,10	24,10	47,50	90,50	143,00	302,00	475,00
1600	5,28	13,40	26,80	52,80	101,00	159,00	335,00	528,00
1800	5,94	15,10	30,20	59,40	113,00	179,00	377,00	594,00
2000	6,60	16,80	33,50	66,00	126,00	199,00	419,00	660,00
2200	7,26	18,40	36,90	72,60	138,00	219,00	461,00	726,00
2400	7,92	20,10	40,20	79,20	151,00	239,00	503,00	
2600	8,58	21,80	43,60	85,80	163,00	259,00	545,00	
2880	9,50	24,10	48,30	95,00	181,00	286,00		
3000	9,90	25,10	50,30	99,00	188,00	298,00		
3600	11,90	30,10	60,30	118,00	226,00			
Nominal Torque (Nm)	31,50	80,00	160,00	315,00	600,00	950,00	2000,00	3150,00
Max Torque (Nm)	72,00	180,00	360,00	720,00	1500,00	2350,00	5000,00	7200,00

Fire Resistant/Anti-Static (F.R.A.S.) inserts are available to special order.
For speeds below 100 rev/min and intermediate speeds use nominal torque ratings.
*Maximum coupling speeds are calculated using an allowable peripheral speed for the hub material. For selection of smaller sizes with speeds in excess of 3600 rev/min - Consult us.

copyright 2002, 2005, 2008, 2010 maryland metrics

Available from: **MARYLAND METRICS**
Phones: (410)358-3130 (800)638-1830 Faxes: (410)358-3142 (800)872-9329
P.O.Box 261 Owings Mills, MD 21117 USA URL: http://mdmetric.com E-mail: sales@mdmetric.com

HRC COUPLINGS

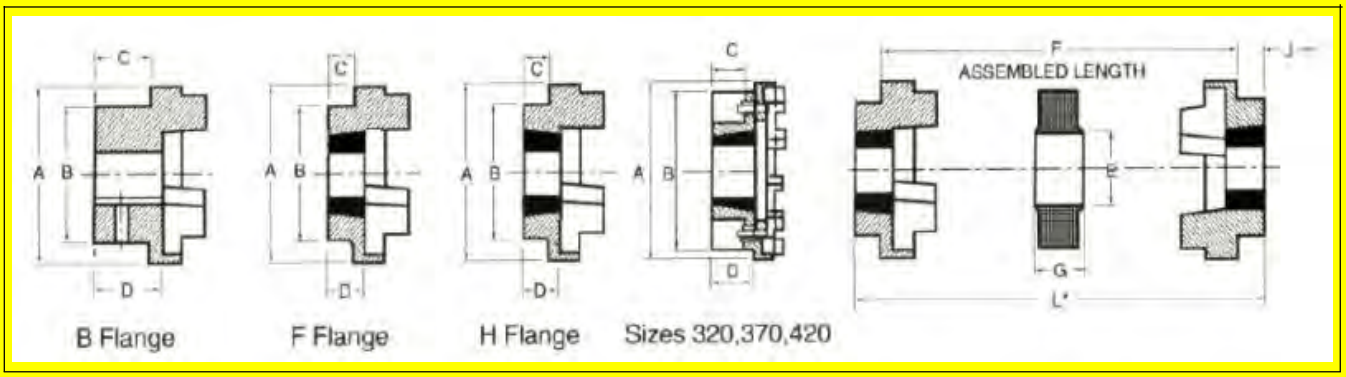

PHYSICAL DIMENSIONS AND CHARACTERISTICS

Common Dimensions						Type F&H						Type B				
							Max. Bore					Bore Dia.				
Size	A	B	E	F+	G	Bush size	MM	Inches	C	D	J+	Max.	Pilot H9	Screw over key	C	D
70	69,0	60,0	31,0	25,0	18,0	1008	25	1,000	20,0	23,5	29,0	32	10	M 6	20,0	25,8
90	85,0	70,0	32,0	30,5	22,5	1108	28	1,125	19,5	23,5	29,0	38	10	M 6	26,0	30,0
110	112,0	100,0	45,0	45,0	29,0	1610	42	1,625	18,5	26,5	38,0	55	10	M10	37,0	45,3
130	130,0	105,0	50,0	54,0	36,0	1610	42	1,625	18,0	26,5	38,0	60	20	M10	39,0	47,5
150	150,0	115,0	62,0	61,0	40,0	2012	50	2,000	23,5	33,5	42,0	70	28	M10	46,0	60,0
180	180,0	125,0	77,0	74,0	49,0	2517	60	2,500	34,5	46,5	48,0	80	28	M10	58,0	70,0
230	225,0	155,0	99,0	85,5	59,5	3020	75	3,000	39,5	52,5	55,0	100	45	M12	77,0	90,0
280	275,0	206,0	119,0	105,5	74,5	3525	100	4,000	51,0	66,5	67,0	115	55	M16	90,0	105,5

+ 'J ' is the wrench clearance required for tightening/loosening the bush on the shaft. A shortened wrench will allow this dimension to be reduced.
+ F, refers to combinations of flanges: FF, FH, HH, FB, HB, BB.
Bore limits H7 unless specified otherwise.

ASSEMBLED

Size	Assembled Length (L*) Comprising Flange Types			Mass (kg)	Inertia Mr2 (kgm2)	Dynamic Stiffness (Nm)	Maximum Misalignment		Nominal Torque (Nm)
	FF,FH,HH	FB,HB	BB				Parallel	Axial	
70	65,0	65,0	65,0	1,00	0,00085	—	0,3	+0,2	70
90	69,5	76,0	82,5	1,17	0,00115	—	0,3	+0,5	90
110	82,0	100,5	119,0	5,00	0,00400	65	0,3	+0,6	110
130	89,0	110,0	131,0	5,46	0,00780	130	0,4	+0,8	130
150	107,0	129,5	152,0	7,11	0,01810	175	0,4	+0,9	150
180	142,0	165,5	189,0	16,60	0,04340	229	0,4	+1,1	180
230	164,5	202,0	239,5	26,00	0,12068	587	0,5	+1,3	230
280	207,5	246,5	285,5	50,00	0,44653	1025	0,5	+1,7	280

Dimensions in millimeters unless otherwise specified.
All HRC Elements have an angular misalignment capacity of up to 1º.
Mass is for an FF, FH or HH coupling with mid range Taper Bushes.

ORDERING CODES

How to order: Add prefix 'R609-' to ordering code. Example: R609-HRC70F

Size	Type F	Type H	Type B Unbored	Standard Element Tempr.-40ºC/+100ºC	FRAS Element Tempr.-20ºC/+80ºC
70	HRC70F	HRC70H	HRC70B	HRC70NA	HRC70FR
90	HRC90F	HRC90H	HRC90B	HRC90NA	HRC90FR
110	HRC110F	HRC110H	HRC110B	HRC110NA	HRC110FR
130	HRC130F	HRC130H	HRC130B	HRC130NA	HRC130FR
150	HRC150F	HRC150H	HRC150B	HRC150NA	HRC150FR
180	HRC180F	HRC180H	HRC180B	HRC180NA	HRC180FR
230	HRC230F	HRC230H	HRC230B	HRC230NA	HRC230FR
280	HRC280F	HRC280H	HRC280B	HRC280NA	HRC280FR

Note: For details of HRC couplings suitable for application to drives involving SAE engine flywheels, consult us.
Type B flanges can be supplied finished bored, with keyway if required.

copyright 2002, 2005, 2008, 2009, 2010 maryland metrics

Click here for how to order tips

Available from: **MARYLAND METRICS**
Phones: (410)358-3130 (800)638-1830 Faxes: (410)358-3142 (800)872-9329
P.O.Box 261 Owings Mills, MD 21117 USA URL: http://mdmetric.com E-mail: sales@mdmetric.com

HRC COUPLINGS
Additional Data

PHYSICAL CHARACTERISTICS
MASS IS FOR COUPLING WITH MID-RANGE BORE TAPER BUSHES
THE MAXIMUM ANGULAR MISALIGNMENT IS 1 DEGREE
FOR SPEEDS BELOW 100 RPM * INTERMEDIATE SPEEDS USE NORMAL TORQUE RATINGS

SIZE	MAX SPEED (REV/MIN)	TORQUE RATING(Nm)		MOMENT OF INERTIA Mr2 (kgm^2)	TORSIONAL STIFFNESS (Nm/Degree)	MAX. MISALIGNMENT		MASS (kg)
		NORMAL	MAX			PARALLET	AXIAL	
HRC -70	9100	31.5	72	0.00085	10.2	0.3	+0.20	1.00
HRC -90	7400	80	180	0.00115	25.5	0.3	+0.49	1.17
HRC -110	5630	160	360	0.00400	48.0	0.3	+0.61	5.00
HRC -130	4850	315	720	0.00780	84.0	0.4	+0.79	5.46
HRC -150	4200	600	1500	0.01810	176.0	0.4	+0.92	7.11
HRC -180	3500	950	2350	0.04340	240.0	0.4	+1.09	16.60
HRC -230	2800	2000	5000	0.12068	336.0	0.5	+1.32	26.00
HRC -280	2300	3150	7200	0.44653	960.0	0.5	+1.70	50.00

Click here for how to order tips

Click here for additional HRC info

copyright 2002, 2005, 2008, 2010 maryland metrics